Lectures 23 and 24, Output Stages and Amplifiers in Feedback
E151/3 F17 – Matthew Spencer

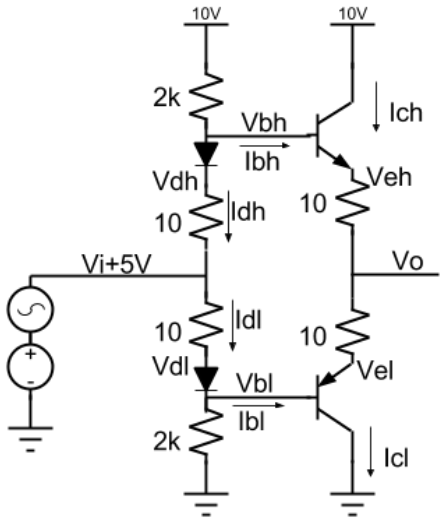


**Figure 1**: A class AB amplifier.

1. Find the DC operating voltages and currents (Vdh, Vdl, Vbh, Vbl, Veh, Vel, Ibh, Ibl, Icl and Ich) of the class AB amplifier in Figure 1. Assume the beta of all transistors (unusually both NPN and PNP) is 100 and the Vbe of all transistors is 0.7V. I recommend making liberal use of symmetry arguments.

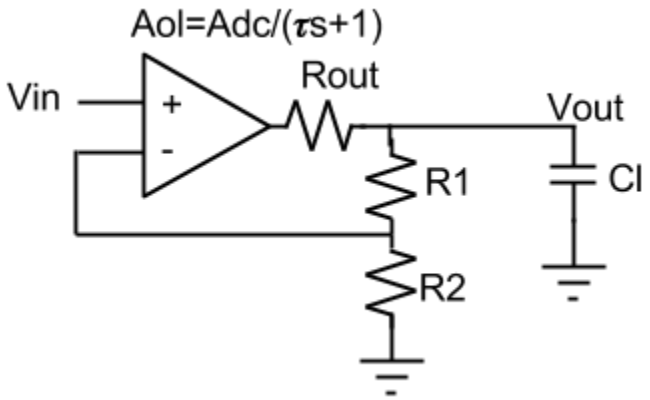


**Figure 2**: An op-amp model for computing maximum capacitive load.

2. Maximum capacitive load is a common specification on op-amp datasheets. When the capacitive load of an op-amp is too high, the op-amp can become unstable. Cl is the load capacitance, Rout is the op-amp's output impedance, and Aol=Adc/(tau*s+1) is the op-amp's open loop gain. Find an expression for the maximum capacitive load of the op-amp in Figure 2, which will require you to think carefully about phase margin. Assume R>>Rout and Rout*Cl<<tau, and express your solutions in terms of the desired feedback factor f=R2/(R1+R2),