Differential Inputs	Practice makes ½ circuits	Single-ended output	Dynamics of diff amp
& Offset			
- constant vs. time varying	- Degeneration	- Take 1 side	- Diff ½ ckt
- DC coupled ~ Note: rail-rail; ~ Note: input bias	~ Note: extends input range; ~ Note: rail-to-rail inputs	- Mirror load	- CM ½ ckt
- offset & diff input	- Equalizer	- Small signal r_o	
	- Summary		
	(3)	(2)	(4)

discussion/balun rec...

(1)

- From lab yesterday, need to review differential inputs

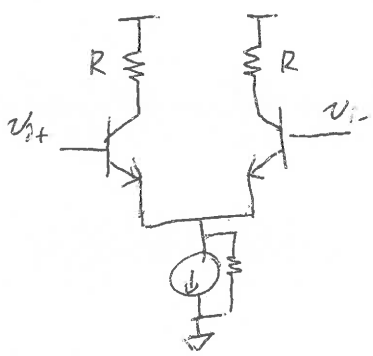

- v_{cm} & v_{dm} are unrelated to frequency

  eg: $v_{i+} = 2V$ & $v_{i-} = 1V \rightarrow v_{cm} = 1.5V$ & $v_{dm} = 1V$

- v_{cm} is often a large constant bias

- v_{dm} is often small $\rightarrow$ use small signal gain A_{dm}

- Measure A_{cm} by injecting time varying common mode signal

$v_{dm} = 0$ & $v_{cm} =$

$\Rightarrow v_{i+} = v_{i-} = v_B + V_{cm}\sin(\omega t)$

~ means V_{ocm} pk-pk will be $A_{cm} \cdot v_{cm}$ $\leftarrow$ $v_{ocm+} = v_{ocm-} = V_{ocm} + \overset{A_{cm}}{v_{cm}}\sin(\omega t)$

~ use time varying b/c easier to see sinusoid @ output, but could measure just w/ DC voltage & multimeter

This is because it is DC coupled!

↳ No coupling cap in amplifier ↳ $I_{bias} = I_{tail}/\beta$

↳ limited input range ~ too low cuts off Q1 & Q2 ~ op-amps rail-to-rail!

- Measure A_{dm} w/ similar technique

$v_{dm} =$

$v_{cm} = V_B$ $\Rightarrow$ $v_{i+} = V_B + \frac{v_{dm}}{2}\sin(\omega t)$

$v_{i-} = V_B - \frac{v_{dm}}{2}\sin(\omega t)$

~ means v_{odm} pk-pk will be $A_{dm} \cdot v_{dm}$.

↳ $v_{ocm+} = V_{ocm} + \frac{A_{dm}}{2} v_{dm}$

↳ measure 1 side $v_{in,pk}$ is $\frac{v_{dm}}{2}$ & $v_{out,pk-pk}$ is $A_{dm} \cdot \frac{v_{dm}}{2}$ ~ can get A_{dm}

- If transistors or resistors aren't identical then you get offset

ideal

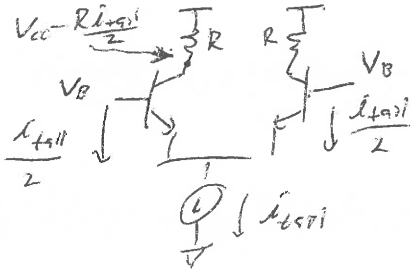

mismatched R (similar to mismatched I_S)

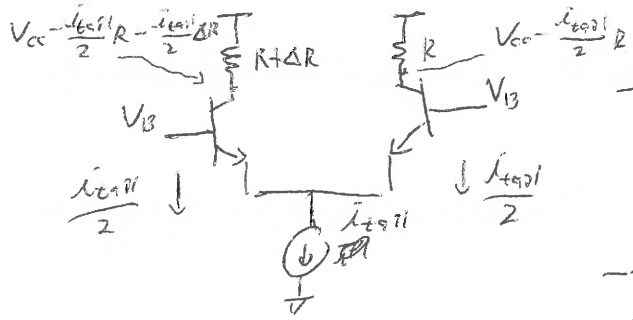

- output referred offset voltage is $-\frac{i_{tail}\Delta R}{2}$
- $v_{cm} = V_B$
- $v_{dm} = 0$

OR

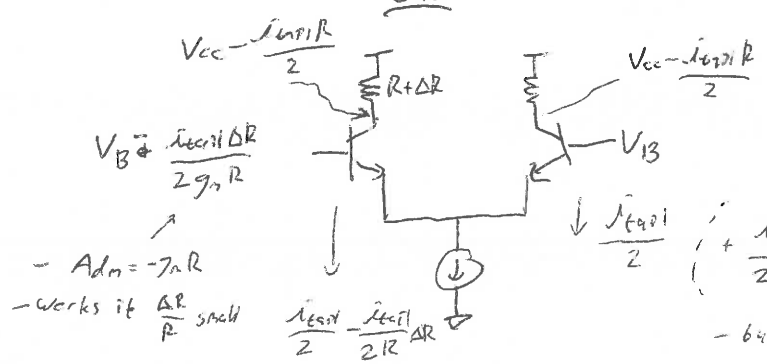

nominally i_{tail} conserved)

$+ \frac{i_{tail}}{2R}\Delta R$

- $A_{dm} = -g_m R$
- works if $\frac{\Delta R}{R}$ small

In this case

↳ $V_{cm} = V_B + \frac{i_{tail}\Delta R}{4 g_m R}$

$v_{dm} = \frac{i_{tail}\Delta R}{2 g_m R}$

- Add small constant diff input to balance output

- but can argue ~ same V_{BE} on both sides, so it doesn't cancel
- really input offset takes into account

Including V_{os} (or I_{os}) in amp model

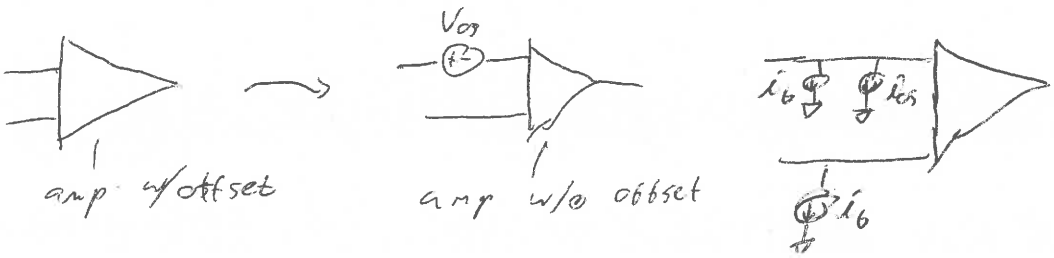

We often want a differential input w/ a single-ended output

- e.g.: op-amps

easiest way

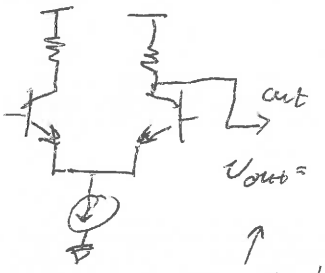

$v_{out} = \frac{A_{dm}}{2} v_{dm} + V_{ocm}$

- issue: discard $\frac{1}{2}$ of A_{dm}
- what we're doing anyway

better way

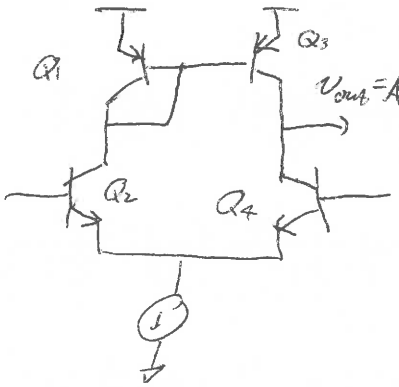

$v_{out} = A_{dm} v_{dm}$

- use current mirror load
- g_m generator of left side reflected to right

- How do we make ½ circuit to analyze something asymmetric

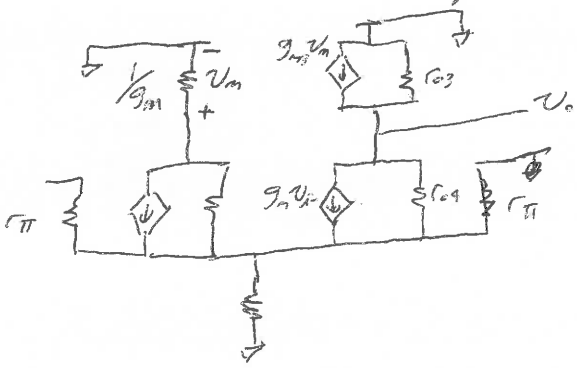

- g_{m3} & g_{m4} appear in parallel (in diff mode
- r_{o3} & r_{o4} sort of in parallel (½ for diff mode)
- But r_o is a fundamentally single ended measurement!
- A_v can be still considered differentially

For A_v:

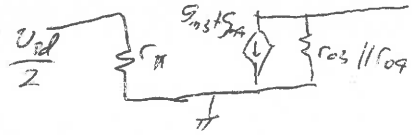

so $A_v = -(g_{m3} + g_{m4})(r_{o3} \| r_{o4})$

For r_o:

(- Anecdote ... my most disappointing moment in this class) NOT $r_{o3} \| r_{o4}$, rather $\frac{r_{o3} \| r_{o4}}{2}$

- see r_{o3} in ‖ w/ rest

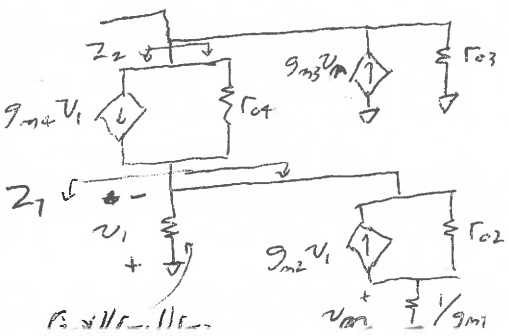

- $Z_1 \approx \frac{1}{g_{m2}}$ b/c control v_1 directly

↳ all current flows in $1/g_{m1}$ resistor, so $v_{dm} = \frac{g_{m2}}{g_{m1}} v_t \approx v_t$ (v_1)

- $Z_2 = r_{o4} + 1/g_{m2} + \frac{g_{m4}}{g_{m2}} r_{o4} \approx 2 r_{o4}$

↳ $v_1 = i_t / g_{m2} = v_t / 2 g_{m2} r_{o4} \rightarrow v_{dm} = \frac{v_t}{2 g_{m2} r_{o4}}$

- $i_t = \frac{v_o}{r_{o4}} + \frac{v_o}{r_{o3}} \cdot \frac{g_{m3}}{g_{m4}} + \frac{v_t}{Z_2} = r_{o3} \| r_{o4}$

More practice w/ ½ circuits

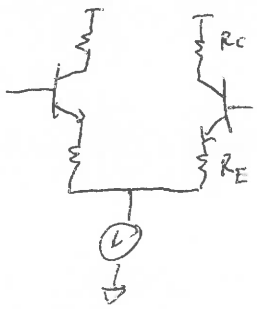

— Draw dm ½ circuit & find Av

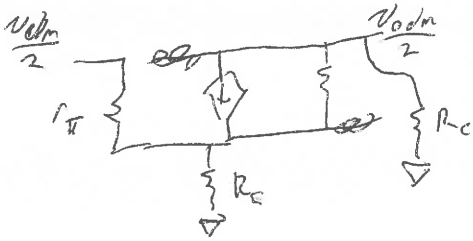

— looks like CE w/ degen

— $A_v \approx -\frac{R_C}{R_E}$

— Extends linear input range ... also true of single ended design

— v_{be} remains ~ 0.7 even as current steered left & right

— linear range ≈ $I_{tail} R_E$ ← voltage when all I steered / wrap

← point @ which v_{be} starts changing

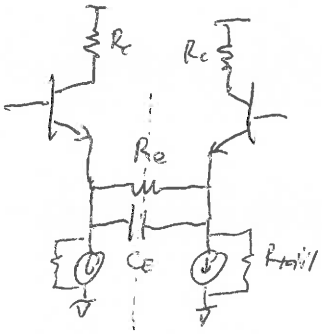

— Find dm & cm ½ ckt. Assume Q1 & Q2 identical

cm

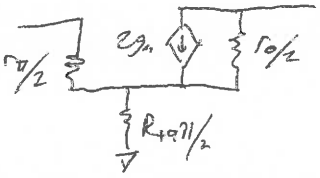

— R_E & C_E shorted b/c tail nodes @ same voltage

dm

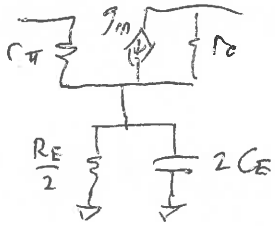

— differential ground in middle of R_E, can't short

— ~~Double~~ half impedance → $\frac{R_E}{2}$, $2C_E$

An equalizer, CTLE, experiences gain boost & we'll see why

Dynamics

— Different for dm signals & cm signals b/c they see different impedances

— use ½ ckt + OCTC & old exact solutions